CARE AND MAINTENANCE

FRAMES

Cleaning - Use mild soap and warm water. Do not use abrasive materials, cleansers or bleach products. Rinse with clean water and dry thoroughly.

Maintenance - Periodically clean and dry thoroughly. Be sure to drain any water accumulated inside the frames. To thoroughly drain frames, remove foot caps and tilt the frames, if necessary, to remove all water. This is critical. Water allowed to accumulate inside the frames and then exposed to sub-freezing temperatures can cause damage to the frame tubing. Such damage is not covered under warranty. Always clean, drain and dry thoroughly before storing for the winter. For best results, always store or cover your furniture when not in use.

** When cleaning or moving large or heavy items, always have two people work together. Never drag furniture.

SPECIAL WARNINGS

THIS ITEM IS INTENDED FOR OUTDOOR DOMESTIC USE ONLY, NOT FOR COMMERCIAL USE.

UMBRELLA USAGE WARNING! This table is not designed to support an umbrella. Use of an umbrella with this table requires an umbrella base (not included). Your table came with an umbrella hole protective ring, make sure it is inserted into the hole in the centre of the table before using an umbrella. Place the umbrella through the opening and into an umbrella stand made of granite, cast iron, wrought iron, steel plate or blow molded plastic filled with 50 lb or 22 kg of sand or water. NEVER USE AN UMBRELLA WITH A TABLE WITHOUT USING AN UMBRELLA BASE AND RING AS DESCRIBED ABOVE. ALWAYS REMOVE YOUR UMBRELLA FROM THE TABLE WHEN NOT IN USE. NEVER USE AN UMBRELLA DURING STORMS OR WINDY CONDITIONS.

Our goods come with guarantees that cannot be excluded under the Australian Consumer Law. You are entitled to a replacement or refund for a major failure and for compensation for any other reasonably foreseeable loss or damage. You are also entitled to have the goods repaired or replaced if the goods fail to be of acceptable quality and the failure does not amount to a major failure.

7 PIECE WOVEN DINING SET
ITM. / ART. 1900713

PATIO FURNITURE ASSEMBLY INSTRUCTIONS

IMPORTANT

RETAIN FOR FUTURE REFERENCE: READ CAREFULLY

MISSING PARTS OR DAMAGED PARTS?
Please call our customer service
US & Canada : 1-888-383-1932 (English and French)
or contact email address at customerservice@agio-usa.com
CUSTOMER SERVICE HOURS ARE 9:00AM - 5:00PM
MONDAY - FRIDAY EST.

International Regions:
Please visit http://www.agio-usa.com/service-center/costco-international/
or contact email address at customerservice@agio-usa.com

TO EXPEDITE ANY FUTURE WARRANTY CLAIMS AND TO RECEIVE UPDATED PRODUCT INFORMATION, BE SURE TO REGISTER YOUR PURCHASE ON OUR WEBSITE AT: www.agio-usa.com

FOR ADDITIONAL SUPPORT ON CARE AND MAINTENANCE OF YOUR AGIO OUTDOOR FURNITURE PLEASE VISIT OUR WEBSITE AT: www.agio-usa.com/support

Agio International Corporation
1250 Oakmead Parkway
Suite 210 Sunnyvale,
Ca 94085-4037 USA

A1E01400
ALE16617

MADE IN CHINA

IMPORTANT INFORMATION ABOUT CLAY AND PORCELAIN TILE

Clay / Porcelain Tabletop

About Clay / Porcelain Tile

Clay / Porcelain Tile is a material that is compressed and heated at high temperatures. Though the material is stain resistant, the grout is porous and could stain. Your tabletop has been sealed and protected with a specially formulated, high quality sealer to minimize staining.

The tabletop can retain heat depending on the outside temperature. In sunny hot weather conditions, care should be exercised when touching the tabletop.

Care and Maintenance

Your tabletop is protected with our specially formulated factory sealer that offers a high level of protection from all stains and acidic liquids and should not break down over time or with normal outdoor use.

The tabletop should not require frequent reapplication of sealer to maintain its durability and the sealer can be easily repaired if it becomes scratched or damaged. However, should you choose to seal your tabletop, you should use only the sealer that was applied to your tabletop during its factory production.

Chemical formulations of sealer products vary and could be incompatible with the sealer that was originally used on your tabletop. Using any sealer other than our factory sealer might produce undesirable results and will void any applicable warranty. Before you reseal your tabletop or to obtain our factory sealer, please visit our website at www.agio-usa.com/claycare or www.agio-usa.com/porcelaincare or call our Customer Service Center in the US and Canada at 1-888-383-1932.

Cleaning

Clay and porcelain are virtually maintenance free. Just keep the table clean with mild soap and water to keep mold & mildew from forming. Simply use clean water and mild dish soap. Clean the tabletop with a soft, clean, white cloth or sponge.

Never use scouring creams, abrasive cleansers, acids, or petroleum based products. Rinse with plenty of clean water to remove soap residue. Dry thoroughly after cleaning to prevent buildup of any residue from minerals that might be present in your water, even with softened water.

Spills

Accidental spills should be cleaned immediately even though your tabletop is sealed. Wipe spills with a clean, soft white cloth. Rinse with clean, warm water and dry thoroughly. The special factory sealer forms a protective barrier that will minimize potential damage to the tabletop by allowing more clean-up time for accidental spills.

Recommendations

To help protect the sealer, use coasters and placemats when dining. Coasters will help absorb sweating by beverage containers and prevent hot containers such as mugs from leaving rings. Placemats will catch spills and prevent dishes from scratching the sealer if dragged across the tabletop. Use trivets or hot pads between dishes and the tabletop to minimize rapid heat transfer. The tabletop can rapidly draw heat from a hot dish and potentially crack the dish. Cover your dining set with an outdoor furniture cover when not in use.

For additional and more detailed information on clay / porcelain tabletop care, sealing the tabletop or to repair damages, visit our website at www.agio-usa.com/claycare or www.agio-usa.com/porcelaincare or call our Customer Service Center in the US and Canada at 1-888-383-1932.

維護與保養

外框
清潔 – 使用溫和無刺激性的肥皂加溫水清理。禁止使用具磨蝕性的材料、清潔劑或漂白水等清潔用品。以清水洗淨並徹底風乾。

保養 – 定期地清理與徹底風乾。需確保框架內積水徹底的排出並使其乾燥。為能完全將水分排除，必要時請拆下腳墊並使外框傾斜以便積水排出。這是很重要的保養步驟。外框內積水並暴露於冰點以下的溫度時，會造成外框的管形材料損壞。此類損壞並不在保固範圍內。冬季前務必先進行清理、排水並徹底乾燥後才可將本產品貯藏起來。為了保持最佳狀態，隨時將不使用的傢俱貯藏或覆蓋。我們建議使用市售的戶外傢俱防護罩。

** 清潔或搬動大型或較重物品時，必須要由兩人一起搬動。禁止拖拉傢俱。

特別警告
本產品僅供居家戶外使用。禁止做為商業用途。

使用雨傘警告！本產品並未做支撐雨傘的設計。若要使用雨傘，必須要有雨傘底座（不包含）。若桌子已有附上雨傘洞保護套環，在使用雨傘前，確認保護套環已安裝於桌子中央的孔洞內。將雨傘穿過開口插入花崗岩、鑄鐵、鍛鐵、鋼板或裝有50磅或22公斤的水或沙子的塑膠模型底座中。禁止在沒有以上所述的雨傘底座與保護環的情況下使用雨傘。不使用時請將雨傘拆除。遇暴風雨及風大的情況下，禁止使用雨傘。

我們的商品保證遵照澳洲消費者法(the Australian Consumer Law)，並未設排除條款。您有權於商品發生重大缺失時要求換貨或退款，以及因可預見的損失及毀損要求合理的賠償金。您也有權在產品無法達到可接受的品質範圍以及在該缺失並未造成重大故障時要求提供維修及換貨處理。

戶外仿藤編7件組
品項/商品型號: 1900713

戶外露臺傢俱
組裝說明

內含重要資訊

請妥為保存以供未來參考使用:請詳閱說明

發現零件短少或損壞?
請與客服中心聯絡

美國與加拿大請撥：1-888-383-1932（提供英語及法語服務）
或通過郵件聯繫customerservice@agio-usa.com

客服時間：禮拜一至禮拜五
9:00AM - 5:30PM東岸時間

美國與加拿大以外的地區請流覽我們的網站
http://www.agio-usa.com/service-center/costco-international/
或通過郵件聯繫 customerservice@agio-usa.com

為能加速未來保固索賠的速度並能隨時獲得
更新的產品資訊，請務必至網址www.agio-usa.com註冊所購商品。

若需AGIO戶外傢俱相關保養及維修的額外支援請瀏覽以下網站
www.agio-usa.com/support

Agio International Corporation
1250 Oakmead Parkway
Suite 210 Sunnyvale,
Ca 94085-4037 USA

A1E01400
ALE16617

中國製

陶瓷檯面

關於陶瓷磚

陶瓷磚是一種以高溫壓縮和加熱的物質。雖然此物質可以防污，但水泥漿是有很多孔和可能出現污垢的。此檯面已經用一種特製的高品質密封材料加以密封和保護，幫助將污垢減至最少。

此檯面會因應室外溫度而變熱。在天晴天氣熱時，觸摸檯面時要小心。

保養與維護

此檯面使用我們工廠特製的密封材料加以保護，此材料能夠有效地保護檯面免受一切污垢及酸性液體所影響，而且不會隨時間而分解，正常地在室外使用亦不會分解。

此檯面不需經常重新加上密封材料，亦可保持耐用。如果它被刮花或損壞，亦能夠很容易被修補。不過，如果您選擇把檯面密封，您應該只用此檯面原廠生產的密封材料。

密封材料產品的化學成分各有不同，它們可能與此檯面原本用的不相容。使用任何不是原廠生產的密封材料可能會導致效果不理想，而且會令任何適用的保養作廢。在重新密封檯面或獲取原廠生產的密封材料之前，請瀏覽我們網站www.agio-usa.com/claycare或www.agio-usa.com/claycare，或致電我們在美國及加拿大的客戶服務中心，電話號碼1-888-383-1932。

清潔

陶瓷幾乎是不用維護的。只需用溫和肥皂及清水清潔，以免出現黴菌和發黴便可。請使用清水及溫和清潔劑。使用柔軟、乾淨的布、白布或海綿清潔檯面。

絕對不要用擦洗霜、磨料清潔劑、酸性或石油產品。使用大量清水沖走殘留肥皂。清潔後徹底風乾，以防水中任何可能有的礦物殘渣積聚，必要時可使用軟化水。

倒瀉在檯面上的液體

即使檯面已經被密封，不小心倒瀉在檯面上的液體應立即清潔。倒瀉在檯面上的葡萄酒應該用乾淨的柔軟白布清潔，然後以清潔的溫水沖洗和風乾特製的原廠生產密封材料會產生保護膜，此保護膜在不小心倒瀉液體在檯面時讓您有更多時間清潔，以盡量減少對檯面的潛在損壞。

建議

用膳時使用杯墊及餐墊可幫助保護密封材料。杯墊可幫助吸收杯子滲出的水，並且防止湯杯等熱的容器留下因熱力而在檯面上產生的圈子。餐墊則可阻隔倒瀉在檯面上的液體，並且防止碗碟刮花密封材料。使用三角架或隔熱墊，將碗碟及檯面隔開，以盡量減少高速傳熱。檯面會從熱的碗碟迅速吸熱，這樣可能會使碗碟爆裂。不使用時，請以室外家私套將餐檯蓋好

如欲獲得更多關於陶瓷檯面保養、密封檯面或修復損壞的詳細資訊，請瀏覽我們的網站www.agio-usa.com/claycare或www.agio-usa.com/claycare，或致電我們在美國及加拿大的客戶服務中心，電話號碼1-888-383-1932。

** NOTE: PARTS SHOWN ON PARTS LIST ARE NOT TO SCALE.*
* 注意：零件表上的零件圖示並非等比例呈現

The parts shown on parts list are for one single chair.
零件表上的零件是給一張椅子的組裝.

	PARTS LIST 零件圖示	QTY 數量	ORDER PART # 零件訂購代號	DESCRIPTION 零件說明
A		1	AK1398	SEAT FRAME 椅架
B		1	AK1399	LEFT LEG 左扶手
C		1	AK1400	RIGHT LEG 右扶手
D		4	HW0037	(25 MM) SCREW 短螺絲
E		6	HW0086	(40 MM) SCREW 長螺絲
F		10	HW0004	WASHER 墊圈
G		1	HW0252	ALLEN WRENCH 內六角扳手

*FACTORY ASSEMBLY (*工廠組裝*)*

H		4	FC0755	FOOT CAP 腳塞

MAKE SURE YOU HAVE ALL THE PARTS & HARDWARE AS IDENTIFIED ON THE PARTS LIST
請核對零件表，確認全部組裝零件齊全.

7 PIECE WOVEN DINING SET
戶外仿藤編7件組
ITM. / ART. 1900713
品項/商品型號: 1900713

IMPORTANT RETAIN FOR FUTURE REFERENCE: READ CAREFULLY BEFORE ASSEMBLY

內含重要資訊!!請於組裝前
詳閱使用說明書!!

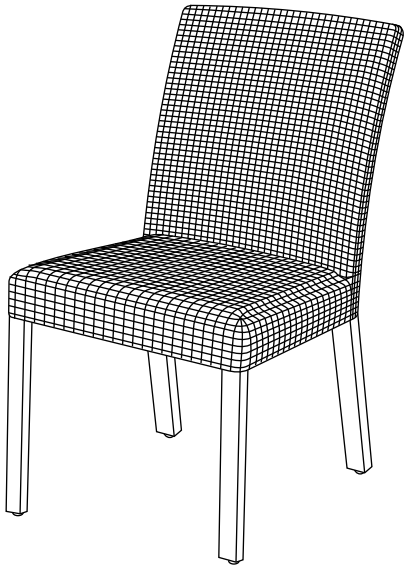

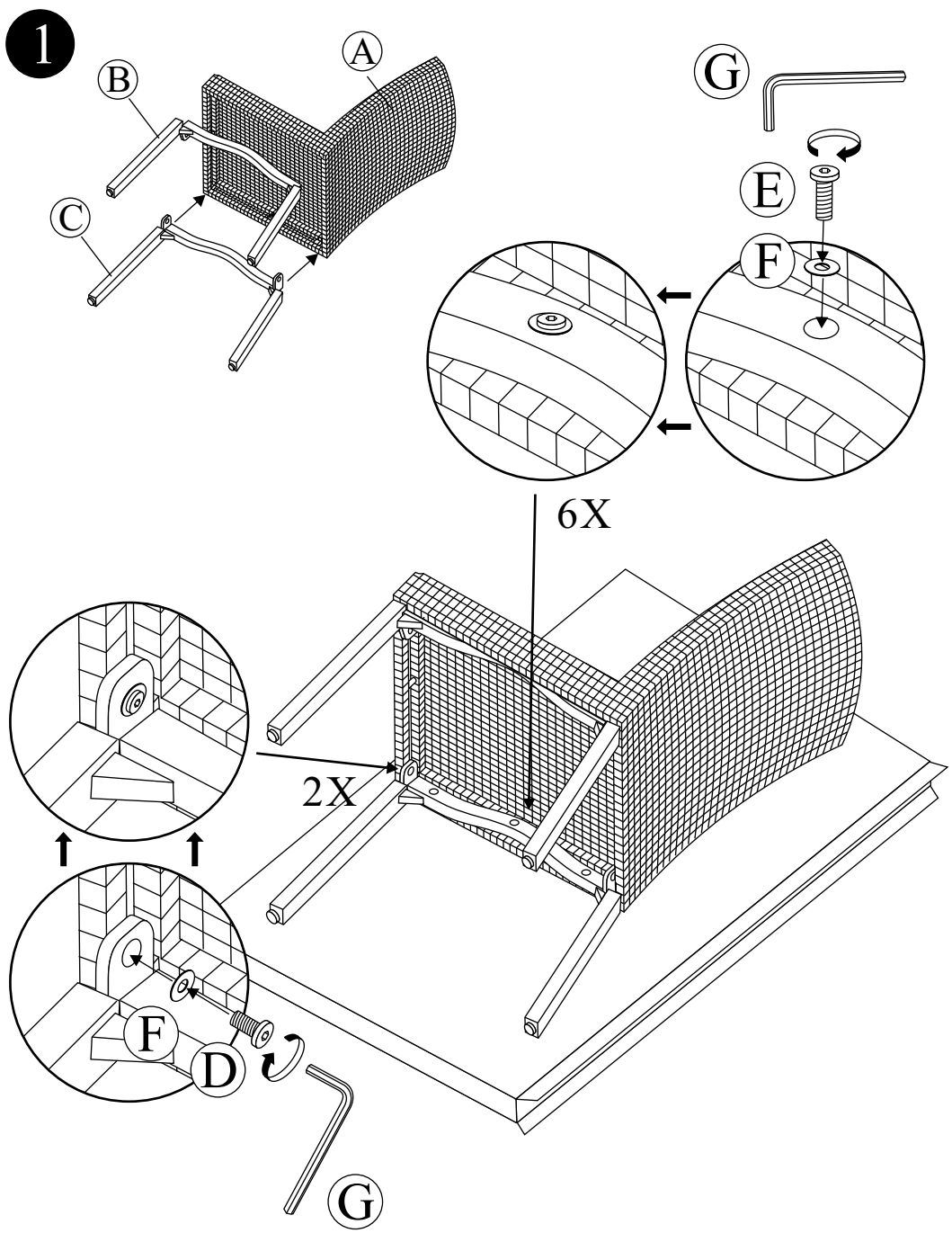
1
A
B
C
G
E
F
6X
2X
F
D
G

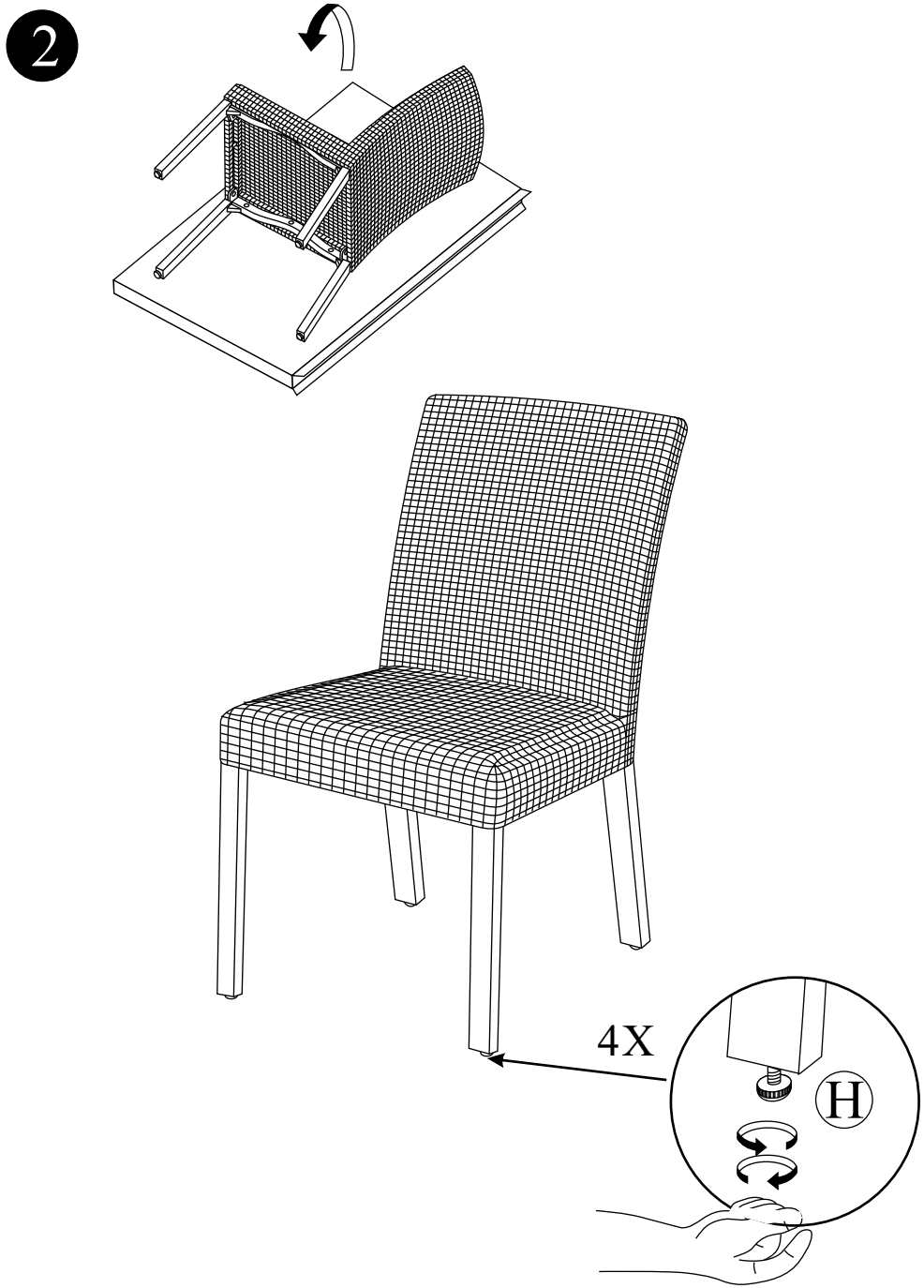
2
4X
H

** NOTE: PARTS SHOWN ON PARTS LIST ARE NOT TO SCALE.*
* 注意：零件表上的零件圖示並非等比例呈現

	PARTS LIST 零件圖示	QTY 數量	ORDER PART # 零件訂購代號	DESCRIPTION 零件說明
A		1	AT52853	LAZY SUSAN 轉盤
B		1	AT52854	TABLE TOP 桌面
C		1	AT52855	TABLE LEG-1 桌腳-1
D		1	AT52856	TABLE LEG-2 桌腳-2
E		2	AT52857	SIDE FRAME 側邊架
F		1	AT52858	LEG CONNECTOR BRACKET-1 腳架-1
G		1	AT52859	LEG CONNECTOR BRACKET-2 腳架-2
H		8	HW0036	(20 MM) SCREW 短螺絲
I		12	HW0086	(40 MM) SCREW 長螺絲
J		16	HW0004	SMALL WASHER 小墊圈
K		4	HW0594	LARGE WASHER 大墊圈
L		1	HW0252	ALLEN WRENCH 內六角扳手
M		1	G0278 & G0279	UMBRELLA RING SET-2 傘孔蓋
N		1	ZZE02312	FURNITURE COVER 防塵罩

FACTORY ASSEMBLY (工廠組裝)

O		1	G0364	UMBRELLA RING SET 傘孔蓋
P		4	FC0755	FOOT CAP 腳塞
Q		1	G0235 & G0236	UMBRELLA RING SET-1 傘孔蓋

MAKE SURE YOU HAVE ALL THE PARTS & HARDWARE AS IDENTIFIED ON THE PARTS LIST
請核對零件表，確認全部組裝零件齊全.

7 PIECE WOVEN DINING SET
戶外仿藤編7件組
ITM. / ART. 1900713
品項/商品型號: 1900713

IMPORTANT RETAIN FOR FUTURE REFERENCE: READ CAREFULLY BEFORE ASSEMBLY

內含重要資訊!!請於組裝前詳閱使用說明書!!

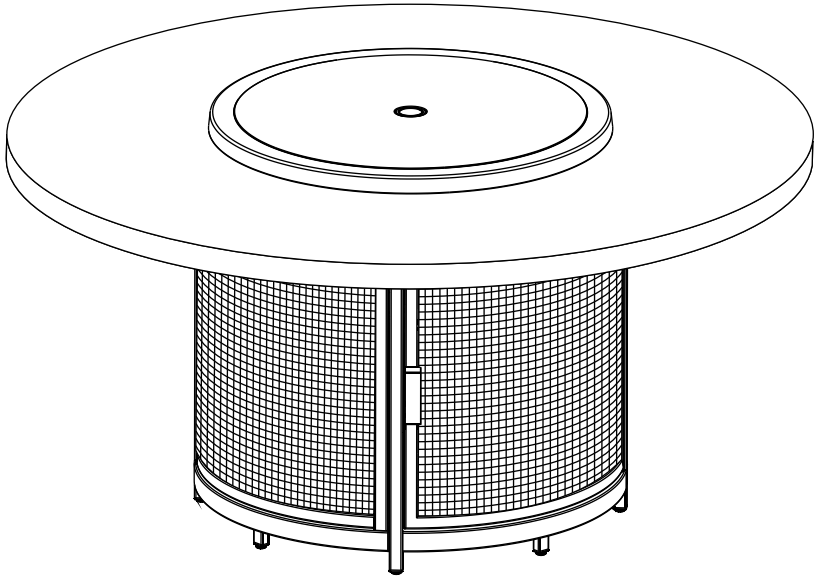

***The furniture cover (N) is designed to protect your investment from the elements and will repel water. Please note the cover is not 100% waterproof and moisture may seep in if allowed to collect.**
* 傢俱防塵罩(N)是設計用來保護產品免受惡劣天候影響以及做為防水之用。請注意，此防塵罩並非100%防水，若水分溼氣聚集則可能滲透入防塵罩內。

1

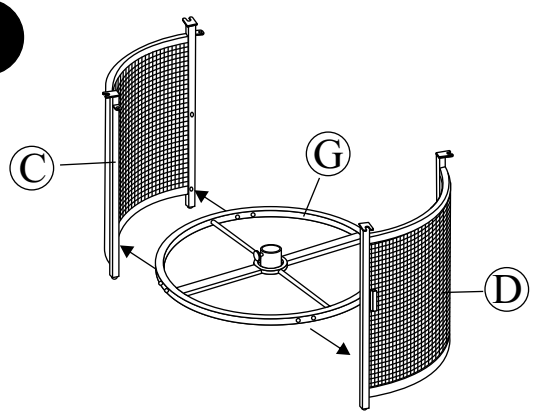

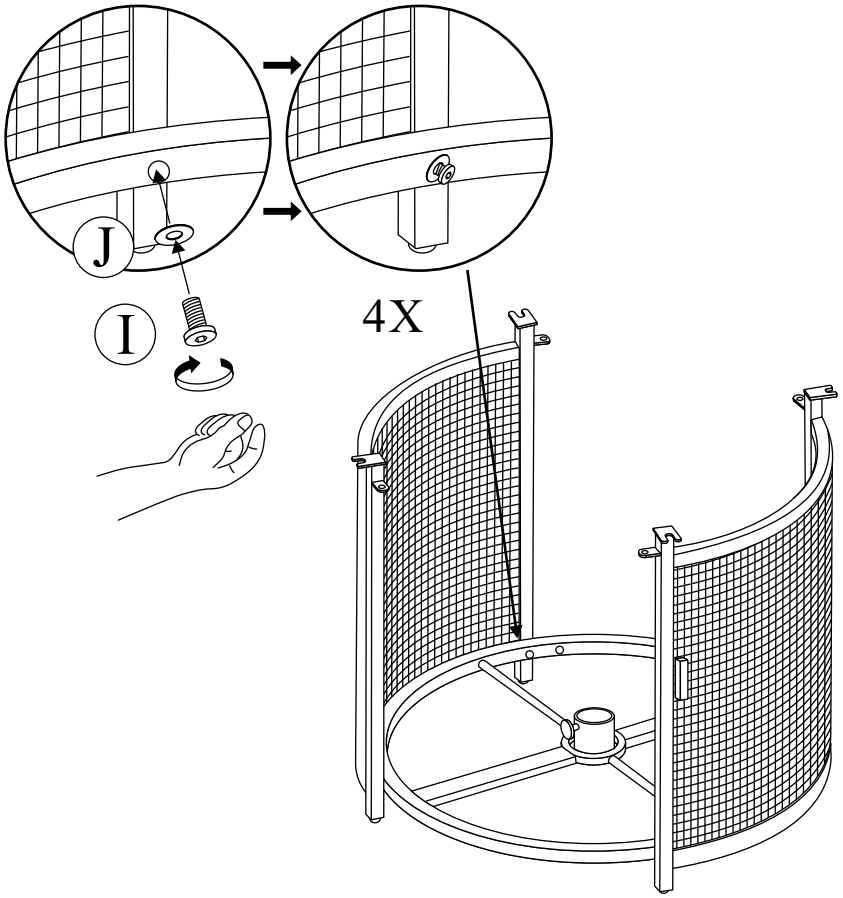

2

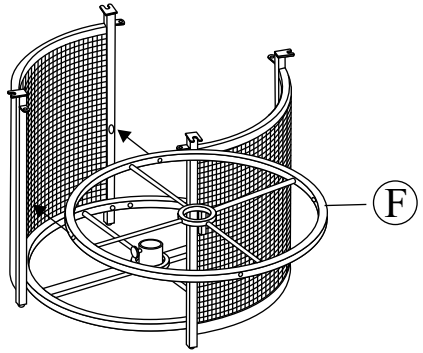

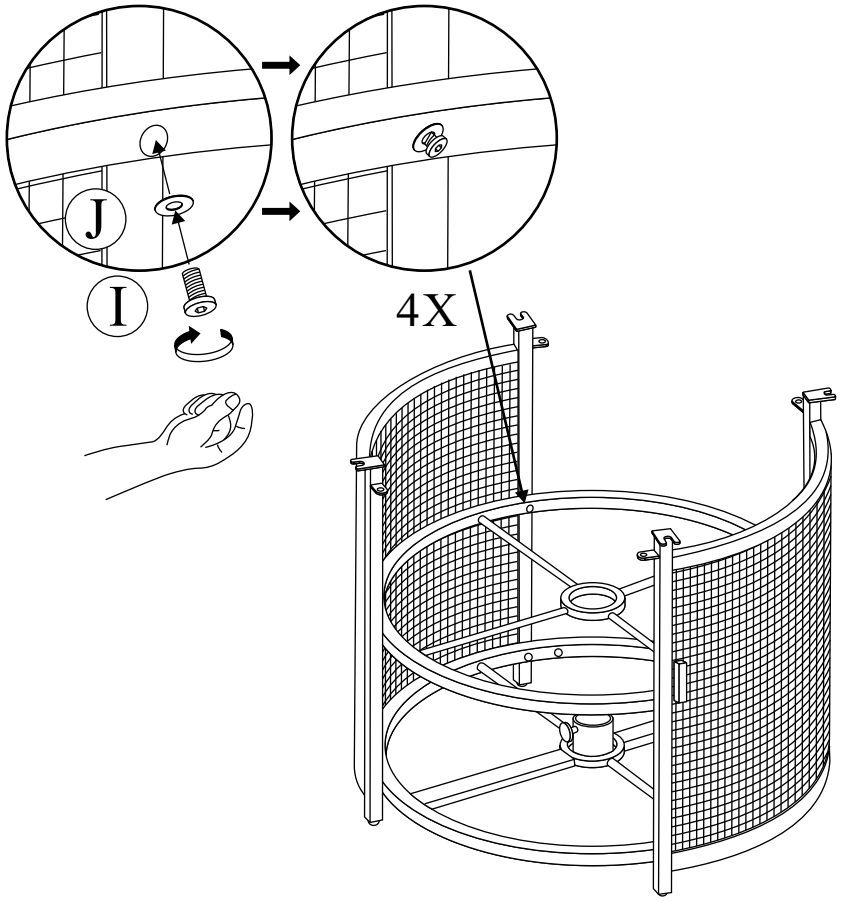

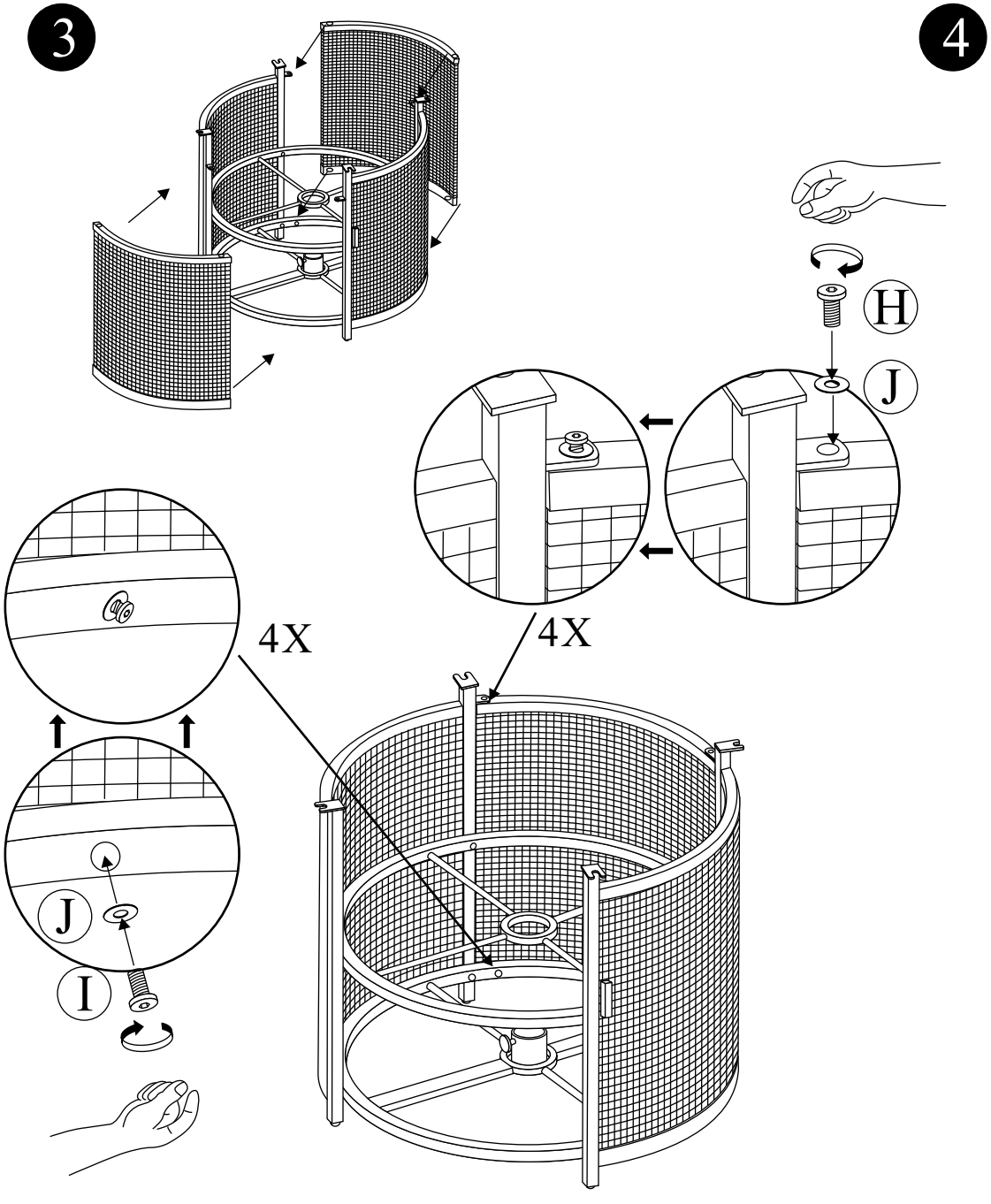
3
H
J
4X
4X
J
I

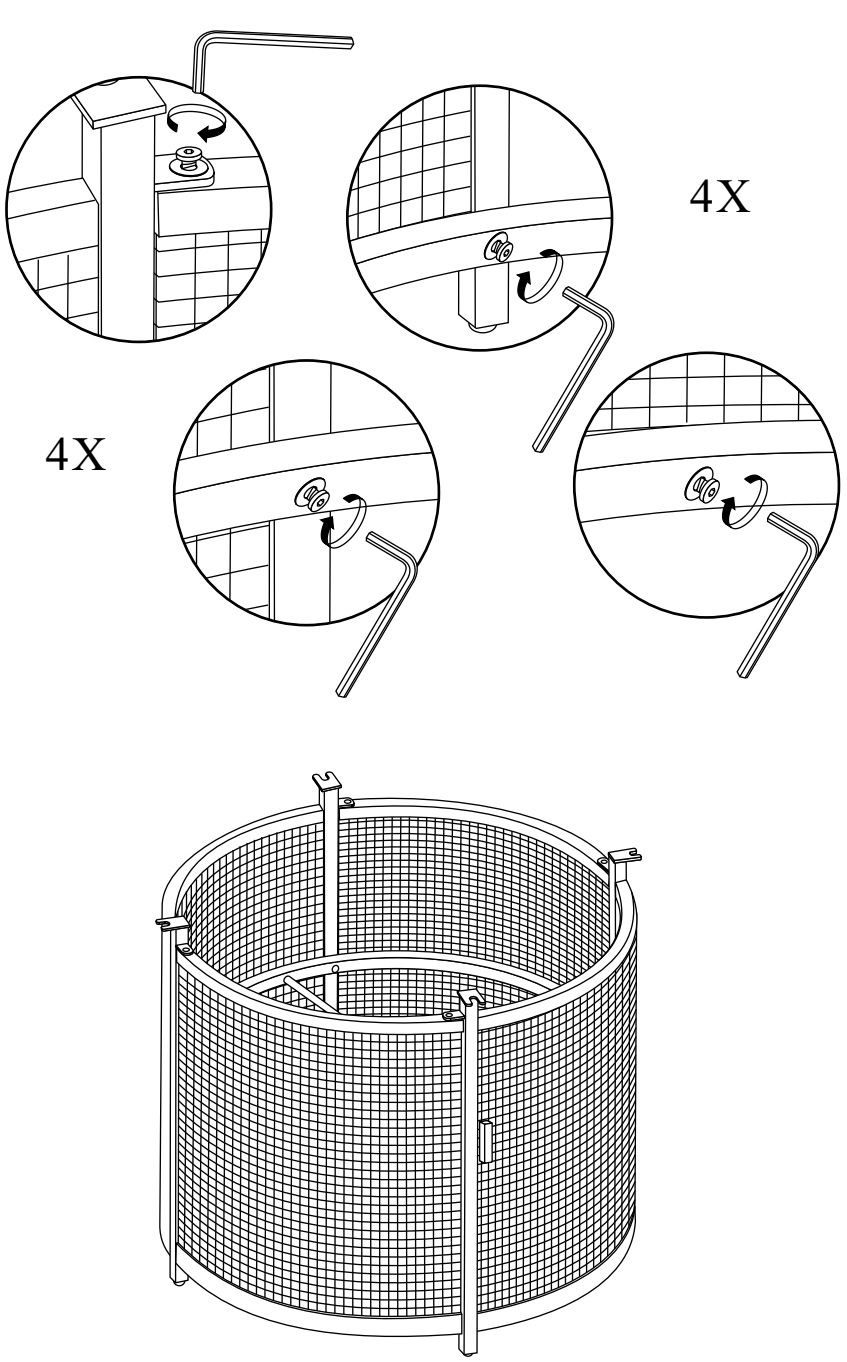
4
4X
4X

5

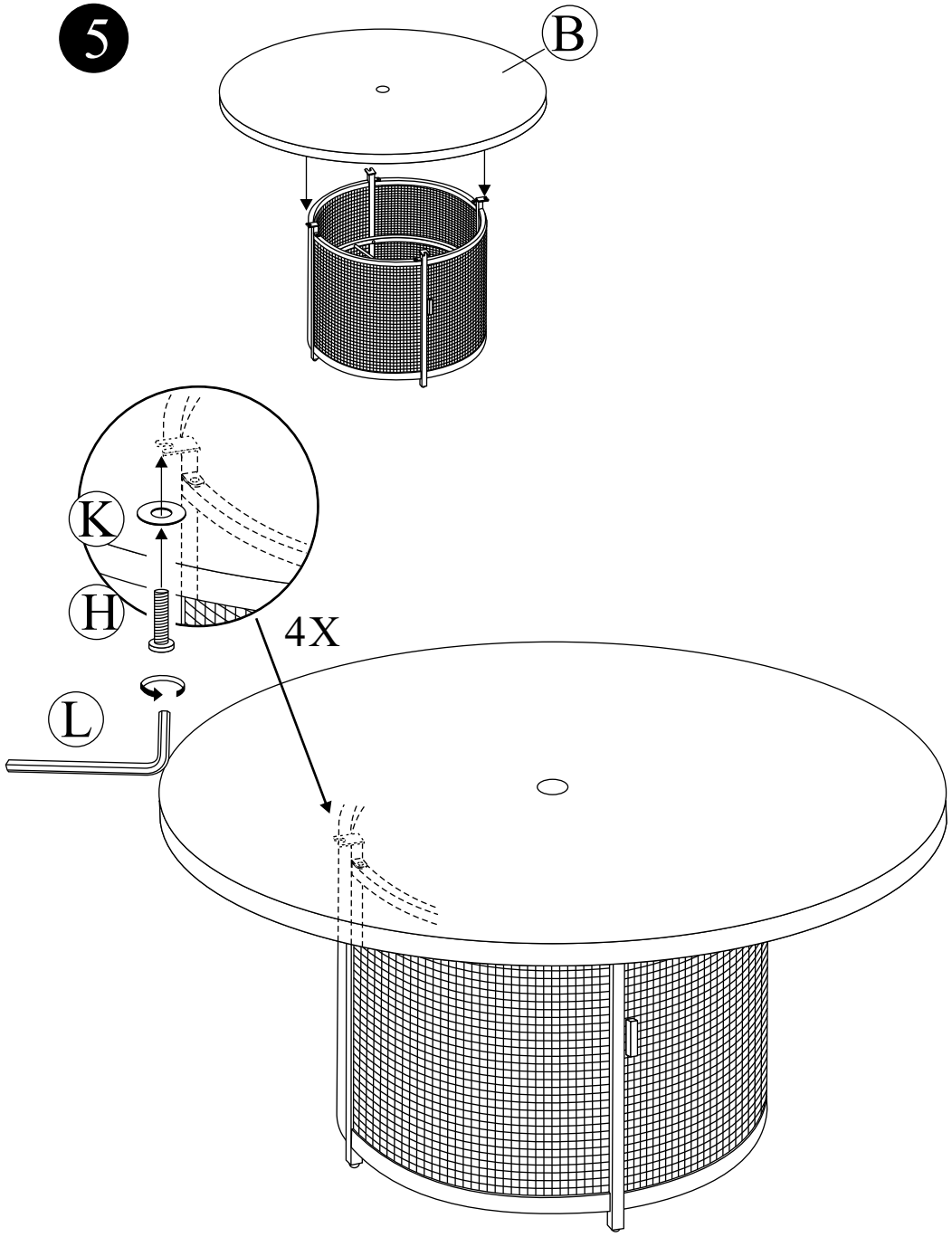

6

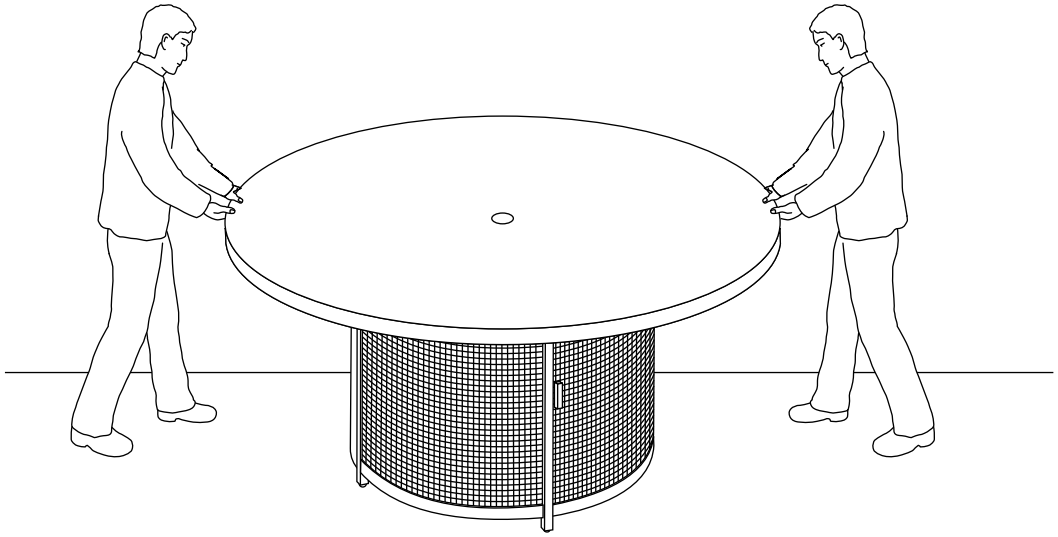

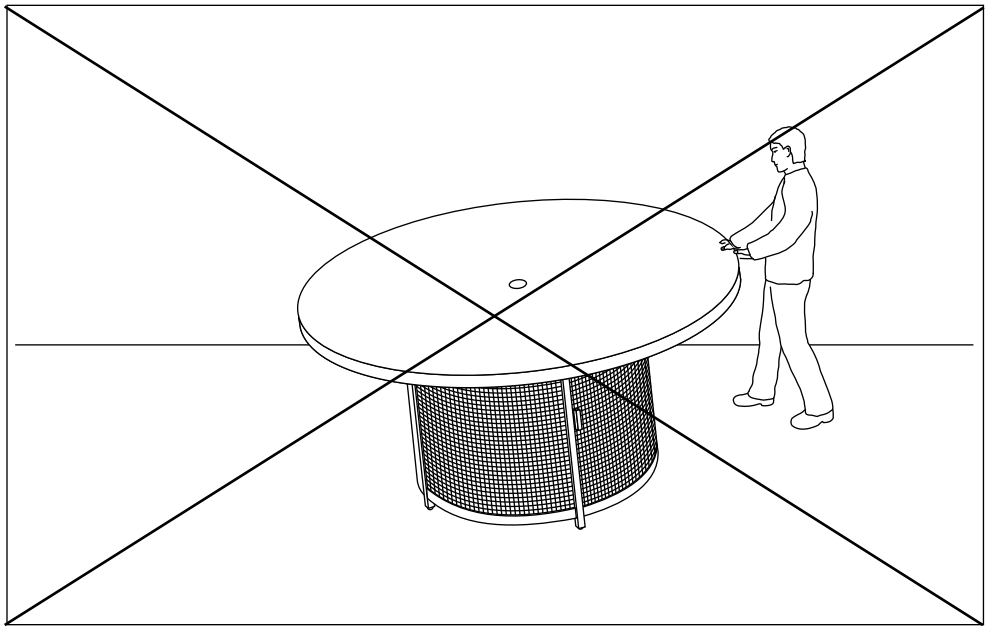

7

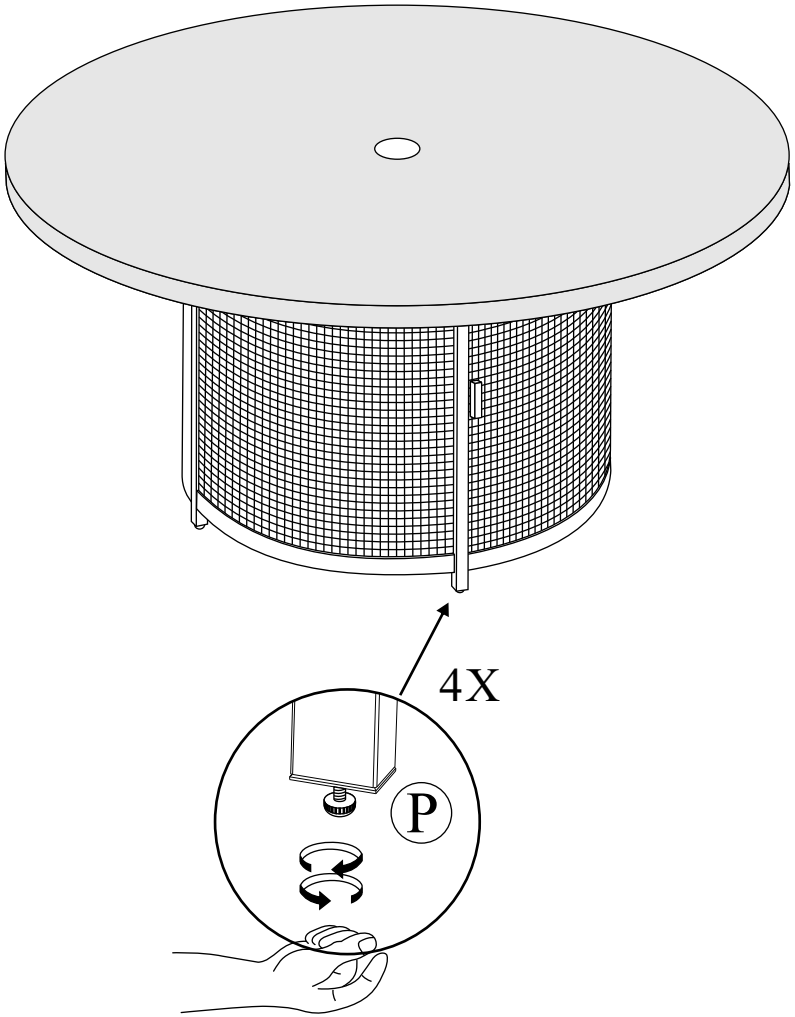

8

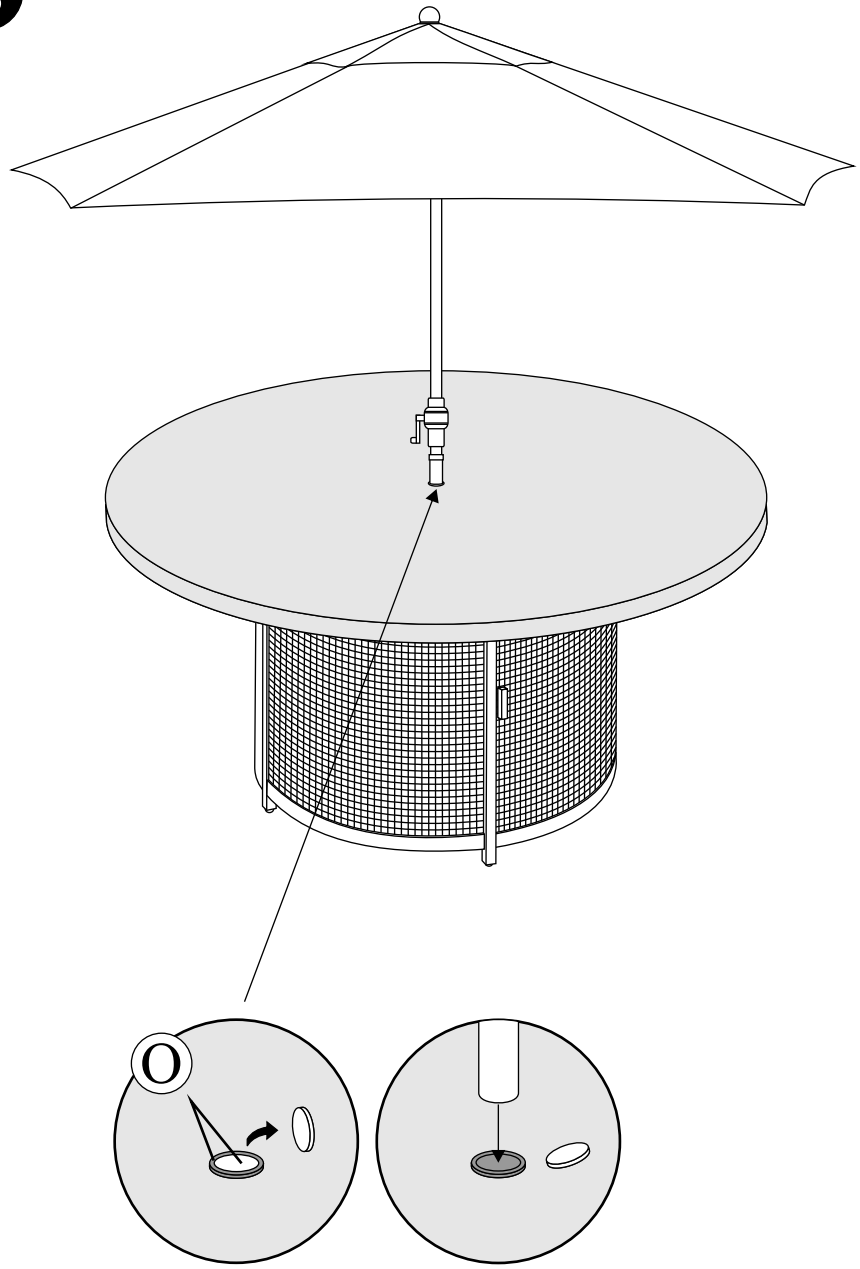

9

When using lazy susan, umbrella pole diameter has to less than 1.4in / 3.8cm.
當使用轉盤時,傘杆直徑必須小於1.4英寸/3.8公分.

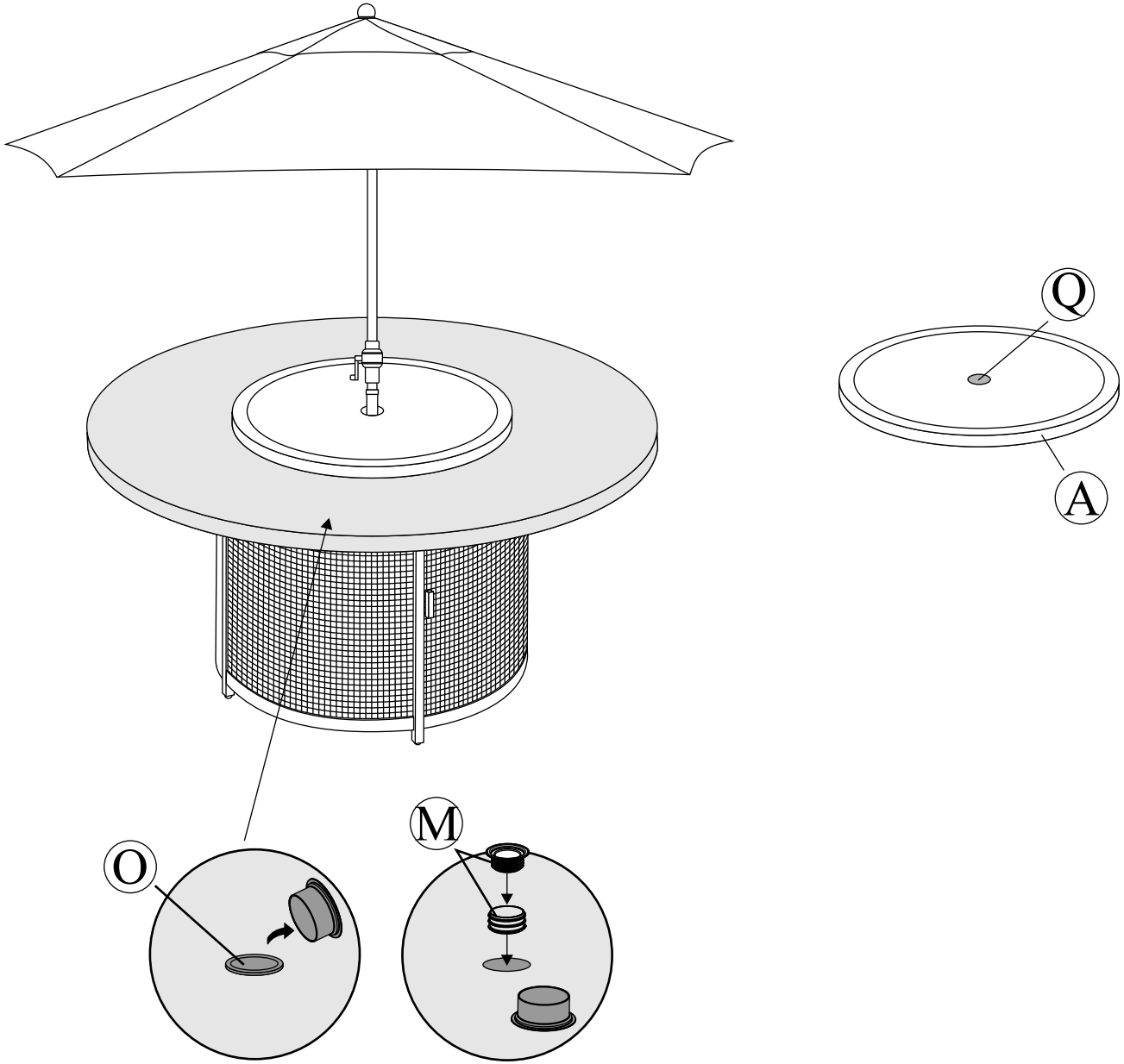

10

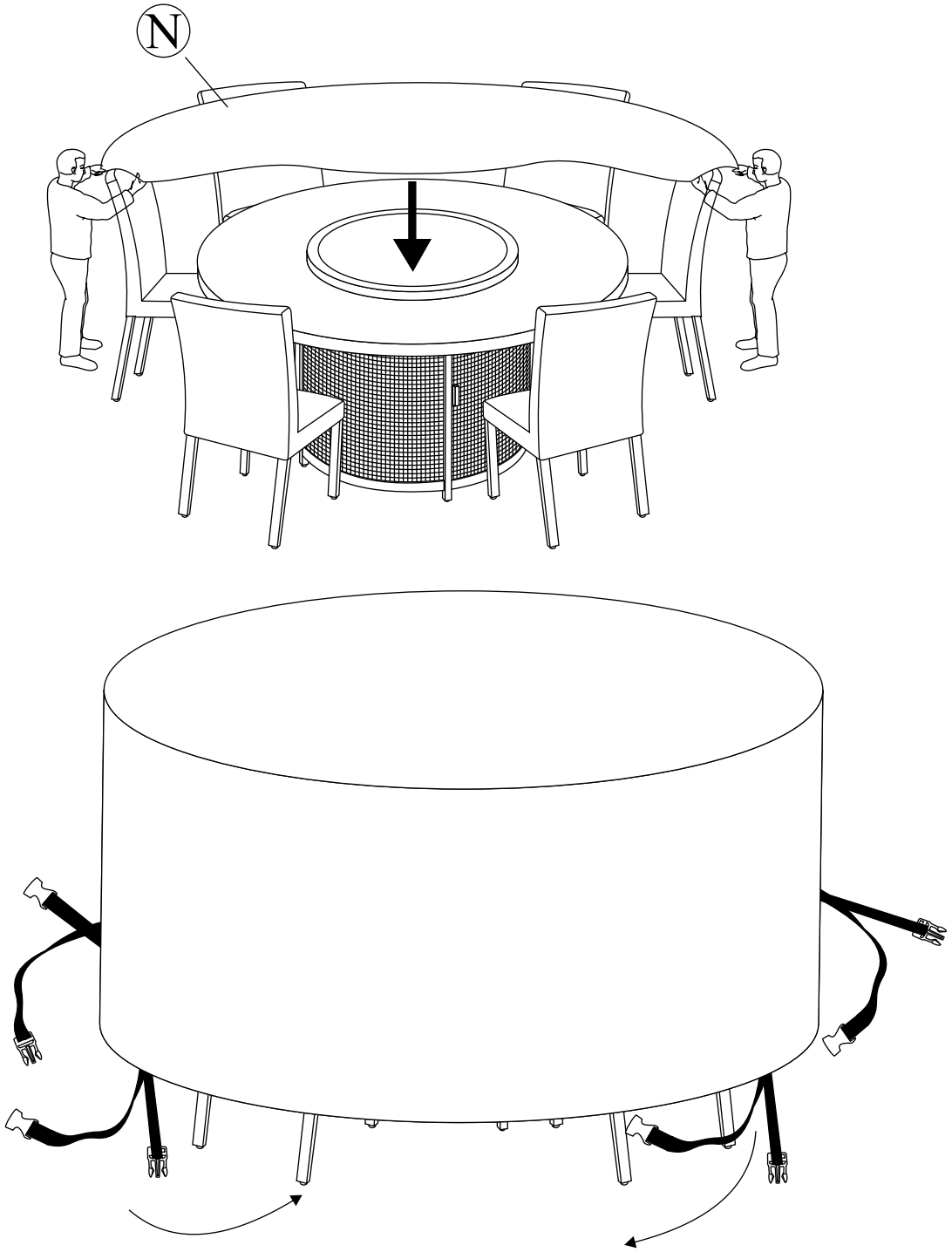

A

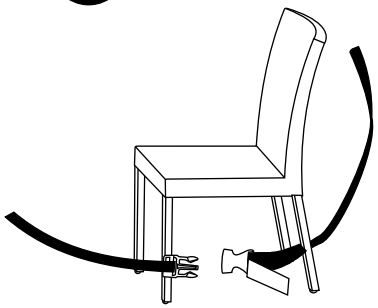

B

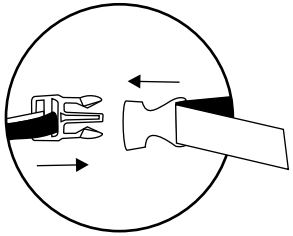

C

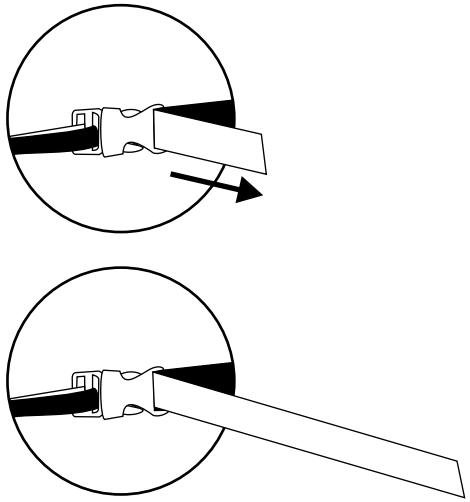

Distributed by:
Costco Wholesale Corporation
P.O. Box 34535
Seattle, WA 98124-1535
USA
1-800-774-2678
www.costco.com

Imported by / Importé par :
Costco Wholesale Canada Ltd.*
415 W. Hunt Club Road
Ottawa, Ontario
K2E 1C5, Canada
1-800-463-3783
www.costco.ca
* faisant affaire au Québec sous
le nom les Entrepôts Costco

Importado por:
Importadora Primex S.A. de C.V.
Blvd. Magnocentro No. 4
San Fernando La Herradura
Huixquilucan, Estado de México
C.P. 52765
RFC: IPR-930907-S70
(55)-5246-5500
www.costco.com.mx

Imported by:
Costco Wholesale Australia Pty Ltd
17-21 Parramatta Road
Lidcombe NSW 2141
Australia
www.costco.com.au

Imported by:
Costco Wholesale UK Ltd /
Costco Online UK Ltd
Hartspring Lane
Watford, Herts
WD25 8JS
United Kingdom
01923 213113
www.costco.co.uk

Importado por:
Costco Wholesale Spain S.L.U.
Polígono Empresarial Los Gavilanes
C/ Agustín de Betancourt, 17
28906 Getafe (Madrid) España
NIF: B86509460
900 111 155
www.costco.es

Distributed by:
Costco Wholesale Iceland ehf.
Kauptún 3-7, 210 Gardabaer
Iceland
www.costco.is

Distribué par :
Costco France
1 avenue de Bréhat
91140 Villebon-sur-Yvette
France
01 80 45 01 10
www.costco.fr

Imported by:
Costco Wholesale Japan Ltd.
3-1-4 Ikegami-Shincho
Kawasaki-ku, Kawasaki-shi,
Kanagawa 210-0832 Japan
044-281-2600
www.costco.co.jp

Imported and Distributed by:
Costco Wholesale Korea, Ltd.
40, Iljik-ro
Gwangmyeong-si
Gyeonggi-do, 14347, Korea
1899-9900
www.costco.co.kr

Imported by / Manufactured for:
Costco President Taiwan, Inc.
No. 656 Chung-Hwa 5th Road
Kaohsiung, Taiwan
Company Tax ID: 96972798
449-9909 or 02-449-9909 (if cellphone)
www.costco.com.tw

Imported by / Distributed by:
Shanghai Minhang Costco Trading Co., Ltd
Unit 109, No 388, Lian You Road
Minhang District, Shanghai
China 201107
+86-21-6257-7065