1902284 Danbury 207-013-6DS-10 BOX1 95 x 76.5 x 95 H CM

2ea Lounge Chair

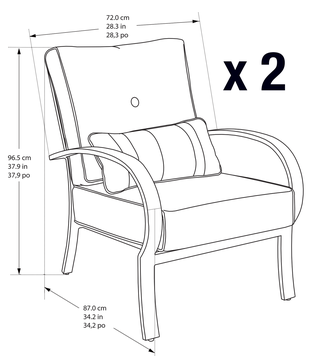
UPC label: 4 x 7.5 cm

UPC label as adhesive stickers in black ink with quality printing for reliable, accurate scanning.

ITM. / ART. 1902284

6 PIECE ALUMINUM SEATING GROUP
ENSEMBLE DE PATIO DE 6 PIÈCES EN ALUMINIUM
SALA DE ALUMINIO DE PATIO DE 6 PIEZAS

1 / 2



CWC

ITM./ART. 1902284
XXX - XXX - XXXX (Optional PO#)
GW / BRUT:____ kg
NW / NET:____ kg
____ m³
QTY / QTÉ / CONT: 1
X / YY (Boxes / pieces count in carton)
(Optional: Boxes / pieces quantity in container)
MADE IN CHINA
FABRIQUÉ EN CHINE
HECHO EN CHINA

MADE IN CHINA / FABRIQUÉ EN CHINE / HECHO EN CHINA

MADE IN CHINA
FABRIQUÉ EN CHINE
HECHO EN CHINA

Law Label Position

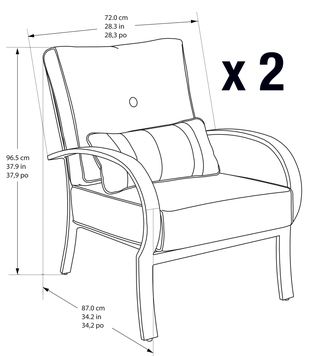
Law Label Position

Law Label Position

ITM. / ART. 1902284

6 PIECE ALUMINUM SEATING GROUP
ENSEMBLE DE PATIO DE 6 PIÈCES EN ALUMINIUM
SALA DE ALUMINIO DE PATIO DE 6 PIEZAS

1 / 2

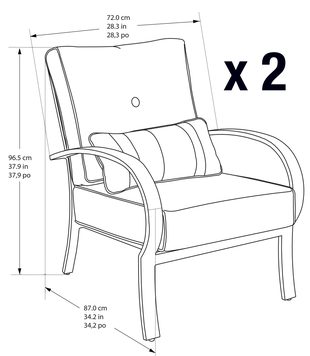


MADE IN CHINA
FABRIQUÉ EN CHINE
HECHO EN CHINA

ITM. / ART. 1902284

6 PIECE ALUMINUM SEATING GROUP
ENSEMBLE DE PATIO DE 6 PIÈCES EN ALUMINIUM
SALA DE ALUMINIO DE PATIO DE 6 PIEZAS

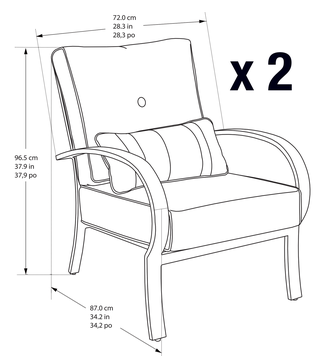
1 / 2



ITM. / ART. 1902284

6 PIECE ALUMINUM SEATING GROUP
ENSEMBLE DE PATIO DE 6 PIÈCES EN ALUMINIUM
SALA DE ALUMINIO DE PATIO DE 6 PIEZAS

1 / 2



MADE IN CHINA
FABRIQUÉ EN CHINE
HECHO EN CHINA

1902284 Danbury 207-013-6DS-10 BOX2 198.5 x 90 x 90.5 H CM

1ea 3-Seater Sofa + 1ea Coffee Table + 2ea End Table

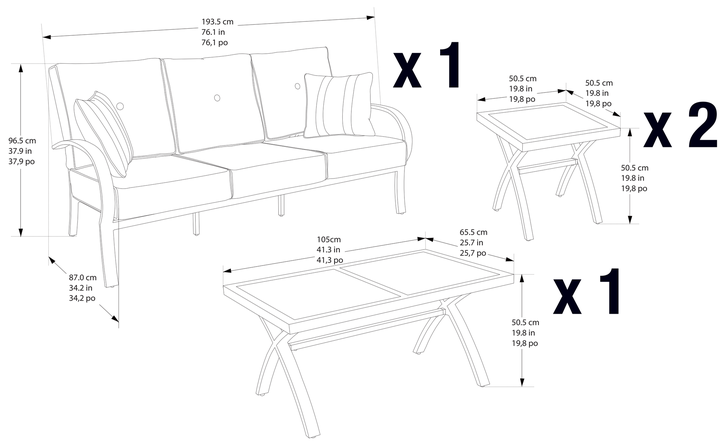
UPC label: 4 x 7.5 cm

UPC label as adhesive stickers in black ink with quality printing for reliable, accurate scanning.

ITM. / ART. 1902284

6 PIECE ALUMINUM SEATING GROUP
ENSEMBLE DE PATIO DE 6 PIÈCES EN ALUMINIUM
SALA DE ALUMINIO DE PATIO DE 6 PIEZAS

2 / 2



CWC

ITM. / ART. 1902284
XXX - XXX - XXXX (Costco POR)
GW / BRUT:_____ kg
NW / NET:_____ kg
_____ m³
QTY / QTÉ / CONT: _1_
X / YY (X = Master Carton count number, YY = Total cartons when quantity in container)
MADE IN CHINA
FABRIQUÉ EN CHINE
HECHO EN CHINA

Distributed by:
Costco Wholesale Corporation
P.O. Box 34331
Seattle, WA 98124-1331
U.S.A.
www.costco.com

Costco Wholesale Canada Ltd.
415 Legget Drive, Kanata
Ottawa, Ontario
K2K 3C3, Canada
613-271-6000
* Peterson d'Ayer au Québec seulement
www.costco.ca

Importado por:
Costco Wholesale S.A. de C.V.
Blvd. Magnocentro No. 4
San Fernando La Herradura
Huixquilucan, Edo. de México
C.P. 52760
RFC: CPA 990811 4Y9
(55) 4099-5000
www.costco.com.mx

Costco Wholesale Australia Pty Ltd
Locomotive Street
Eastern Creek NSW 2154
Australia
www.costco.com.au

Costco Wholesale UK Ltd.
Costco Drive Unit 1A5
Costco Drive
Nailsea, Bristol
BS48 1RA
United Kingdom
0345 026 8221
www.costco.co.uk

Costco Wholesale Spain S.L.U.
Polígono Empresarial Las Dehesas
Calle Costco, Parcela 1
28806 Alcalá de Henares (Madrid)
España
900 711 720
www.costco.es

Costco Wholesale Italia s.r.l.
Rapallo 3.1, 210 Gentilezzi
Rapallo
www.costco.it

Costco France
1 avenue de Bretnal
77700 Serris-Val d'Europe
France
0 800 91 91 91
www.costco.fr

Costco Wholesale Japan Ltd.
Kanematsu Atsugi Building
Kamiarako 4-19-5822 Japan
046-205-1000
www.costco.co.jp

Costco Wholesale Korea Ltd.
Costco Tower
517 Nonhyeon-ro
Gangnam-gu, 135-01, Korea
1599-0918
www.costco.co.kr

Costco President Taiwan, Inc.
No.360 Chung Cheng 6th Road
Taoyuan City 330
Company Tax ID: 89670758
+886-3-3755888 (# of employees)
www.costco.com.tw

Shanghai Minhang Costco Trading Co., Ltd
No.1 Lian Yang Road, Lian Yang
Min Hang District, Shanghai
China 201101
+86-21-6627-7080

MADE IN CHINA / FABRIQUÉ EN CHINE / HECHO EN CHINA

ITM. / ART. 1902284

6 PIECE ALUMINUM SEATING GROUP
ENSEMBLE DE PATIO DE 6 PIÈCES EN ALUMINIUM
SALA DE ALUMINIO DE PATIO DE 6 PIEZAS

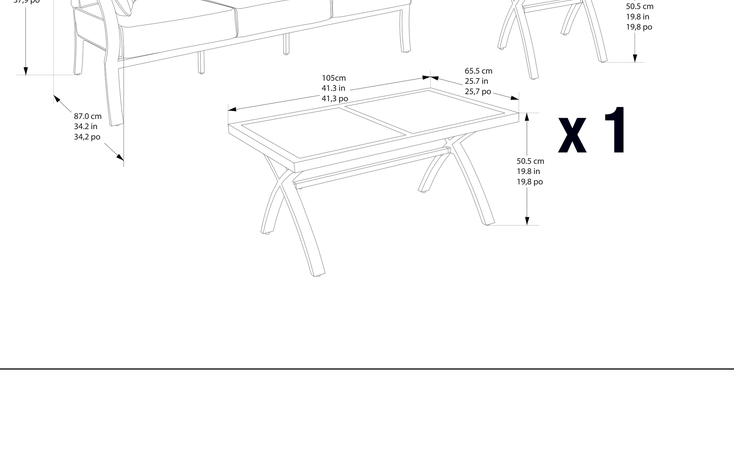
2 / 2

MADE IN CHINA
FABRIQUÉ EN CHINE
HECHO EN CHINA

ITM. / ART. 1902284

6 PIECE ALUMINUM SEATING GROUP
ENSEMBLE DE PATIO DE 6 PIÈCES EN ALUMINIUM
SALA DE ALUMINIO DE PATIO DE 6 PIEZAS

2 / 2



Law Label Position

Law Label Position

Law Label Position

MADE IN CHINA
FABRIQUÉ EN CHINE
HECHO EN CHINA